人工智能数据中心向更高总线电压的演进及可用解决方案

Owen Song
高级首席工程师
英飞凌科技有限公司消费，计算与通讯事业部

数据中心总线电压的演进

全球数据处理量的指数增长及人工智能数据中心电能需求量剧增

Single processor electricity demand over time

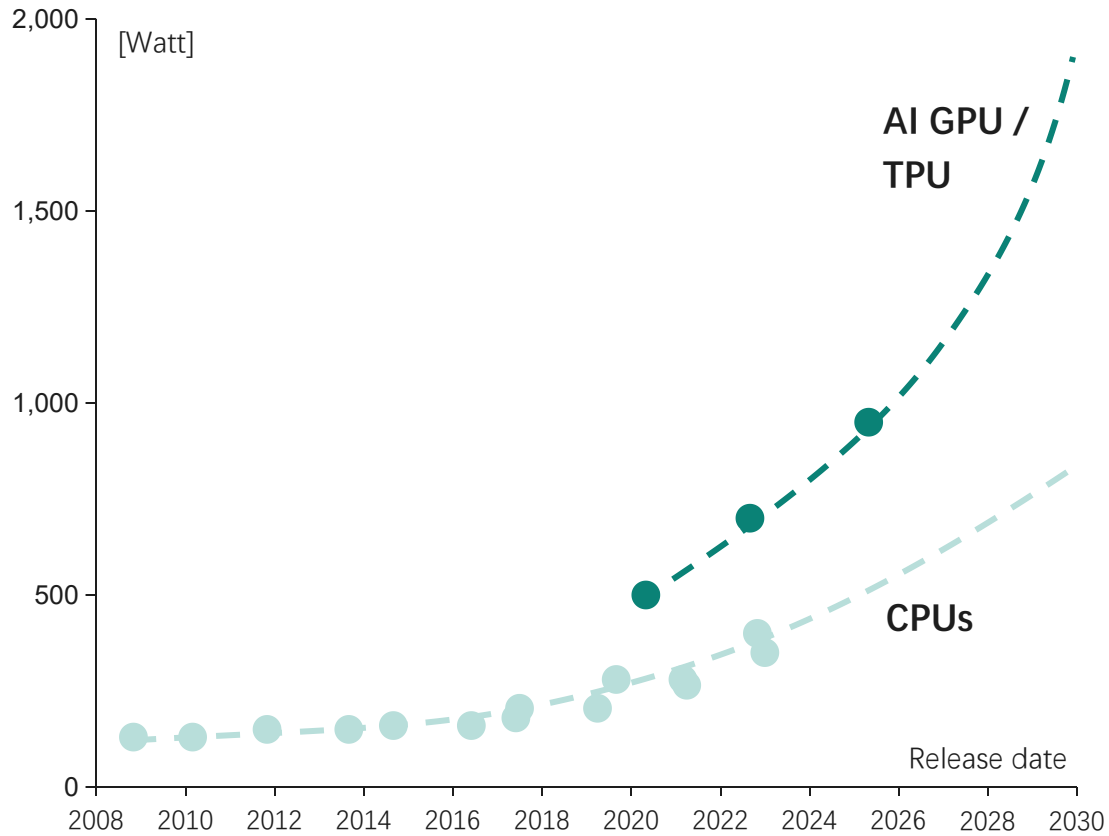

Projected electricity consumption of data centers

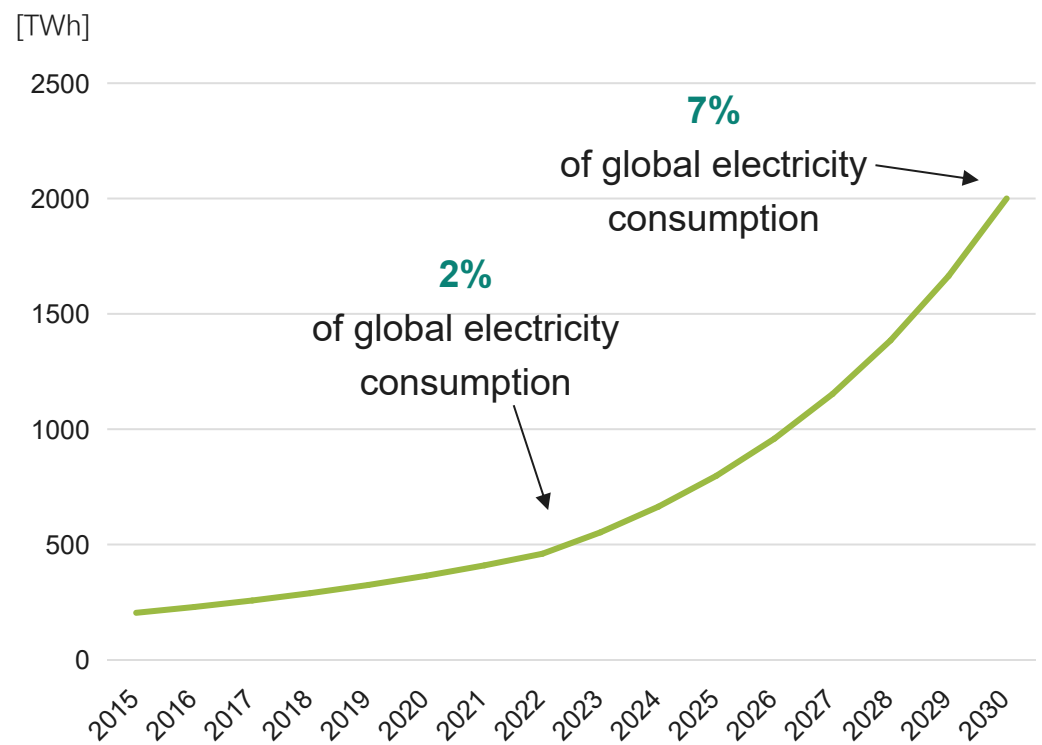

Sources: IEA including crypto mining energy use; Infineon assumption and calculation; McKinsey, BCG

Copyright © Infineon Technologies AG 2025. All rights reserved.

人工智能服务器推动耗电量的增大

ICIC2025

Hyperscale Server Rack A100

Power shelf

2022

40 CPUs **30 kW**
2 power shelfs
12 PSUs x **3 kW**
(N+1 redundancy)

NVIDIA GB200 AI Server Rack*

Power shelf 1

Power shelf 2

2024

72 GPUs / 36 CPUs **120 kW**
6 power shelfs
36 PSUs x **5.5 kW**
(N+N redundancy)

Next gen
Rack
<250 kW

36 PSUs
X
8kW/12kW

~2027

N+ gen
Rack

>1 MW

>2030

* Source: Computex Taipei, June 2nd 2024

Copyright © Infineon Technologies AG 2025. All rights reserved.

数据中心机架总线电压演进的意义

12V → 50V → 400V → 800V(±400V)

ICIC2025

– 降低总线损耗

Bus power loss:

$$P_{loss-bus} = {I_{bus}}^2 R_{bus}$$

$$P_{out} = I_{bus} * U_{bus}$$

$$P_{loss-bus} = \left(\frac{P_{out}}{U_{bus}}\right)^2 R_{bus} = \frac{k}{{U_{bus}}^2}$$

$$P_{loss_50V} = \frac{1}{17.36} P_{loss_12V}$$

$$P_{loss_400V} = \frac{1}{64} P_{loss_50V} = \frac{1}{1110.4} P_{loss_12V}$$

$$P_{loss_800V} = \frac{1}{4} P_{loss_400V} = \frac{1}{256} P_{loss_50V} = \frac{1}{4441.6} P_{loss_12V}$$

– 降低总线成本

Copyright © Infineon Technologies AG 2025. All rights reserved.

数据中心机架总线电压的演进

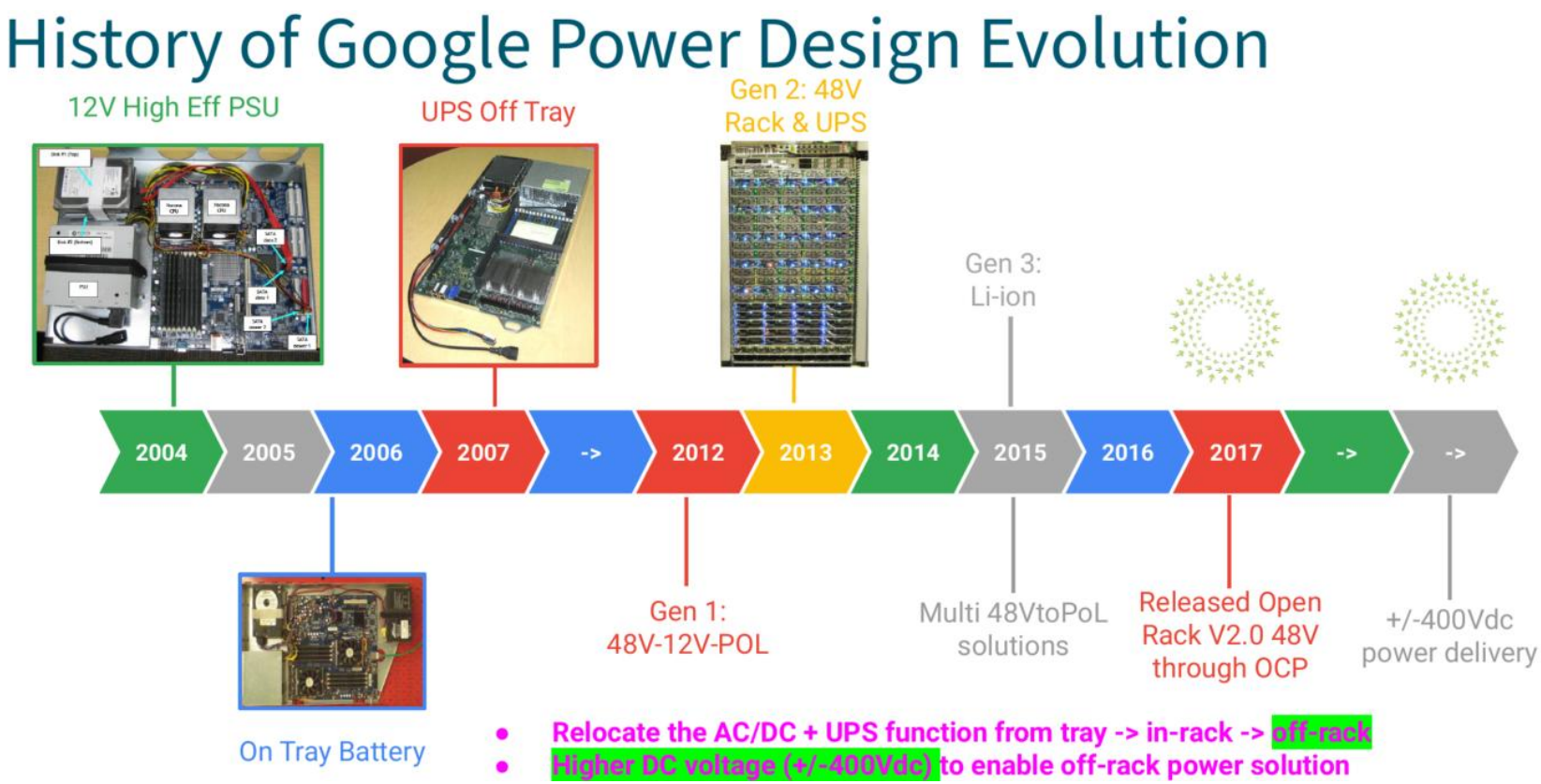

Source: OCP 2024
+/- 400Vdc Rack for AL/ML Applications
Xiao Li, Krishnanjan Gubba Ravikumar, Cristiana Peaboy, Google

Copyright © Infineon Technologies AG 2025. All rights reserved.

ICIC2025

当前人工智能数据中心机架供电架构

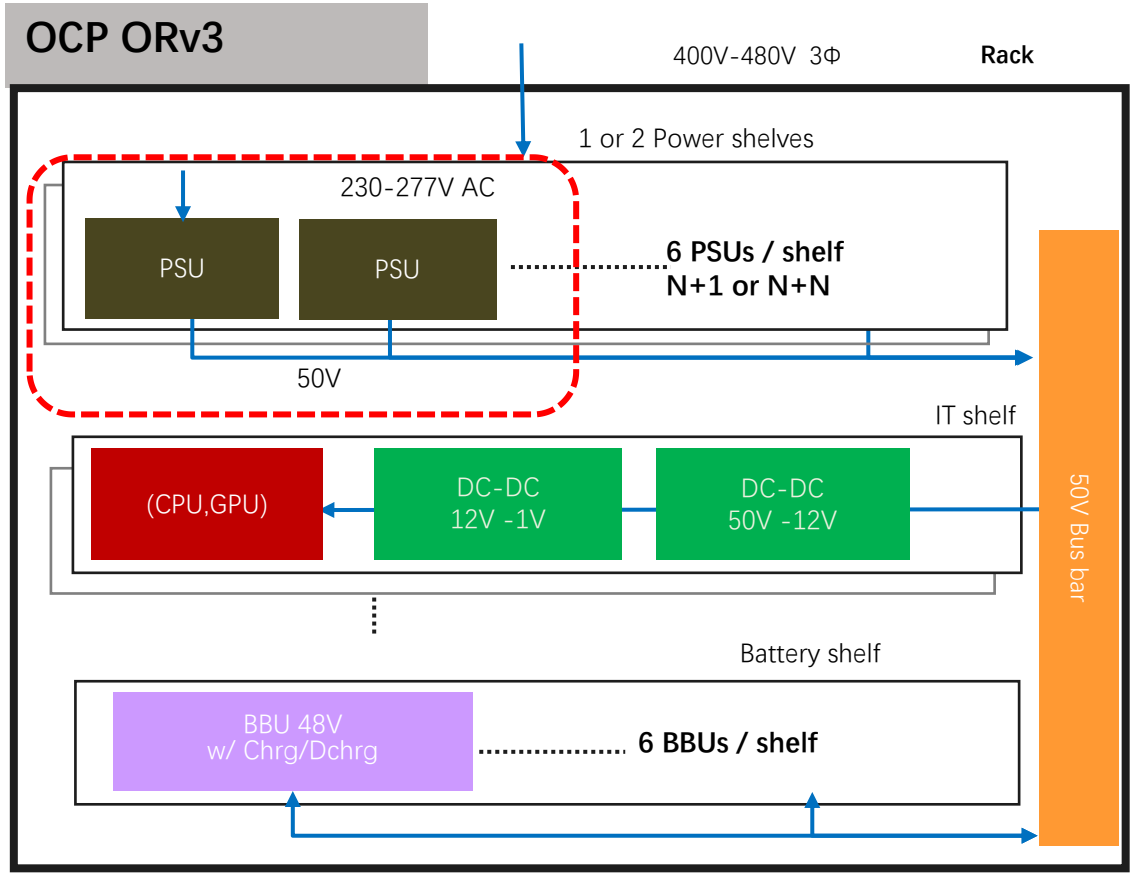

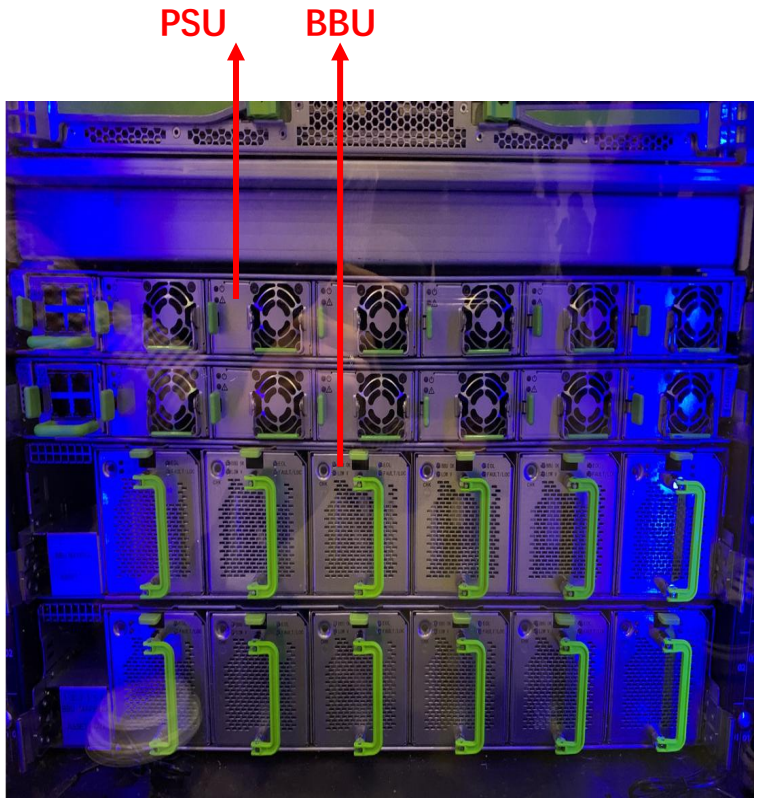

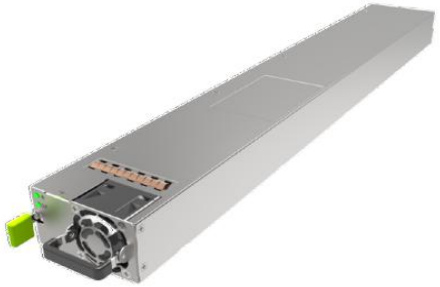

*OCP: Open Compute Project
https://www.opencompute.org/about

ICIC2025

Copyright © Infineon Technologies AG 2025. All rights reserved.

未来高功率(>250KW)人工智能数据中心机架供电架构（预测）

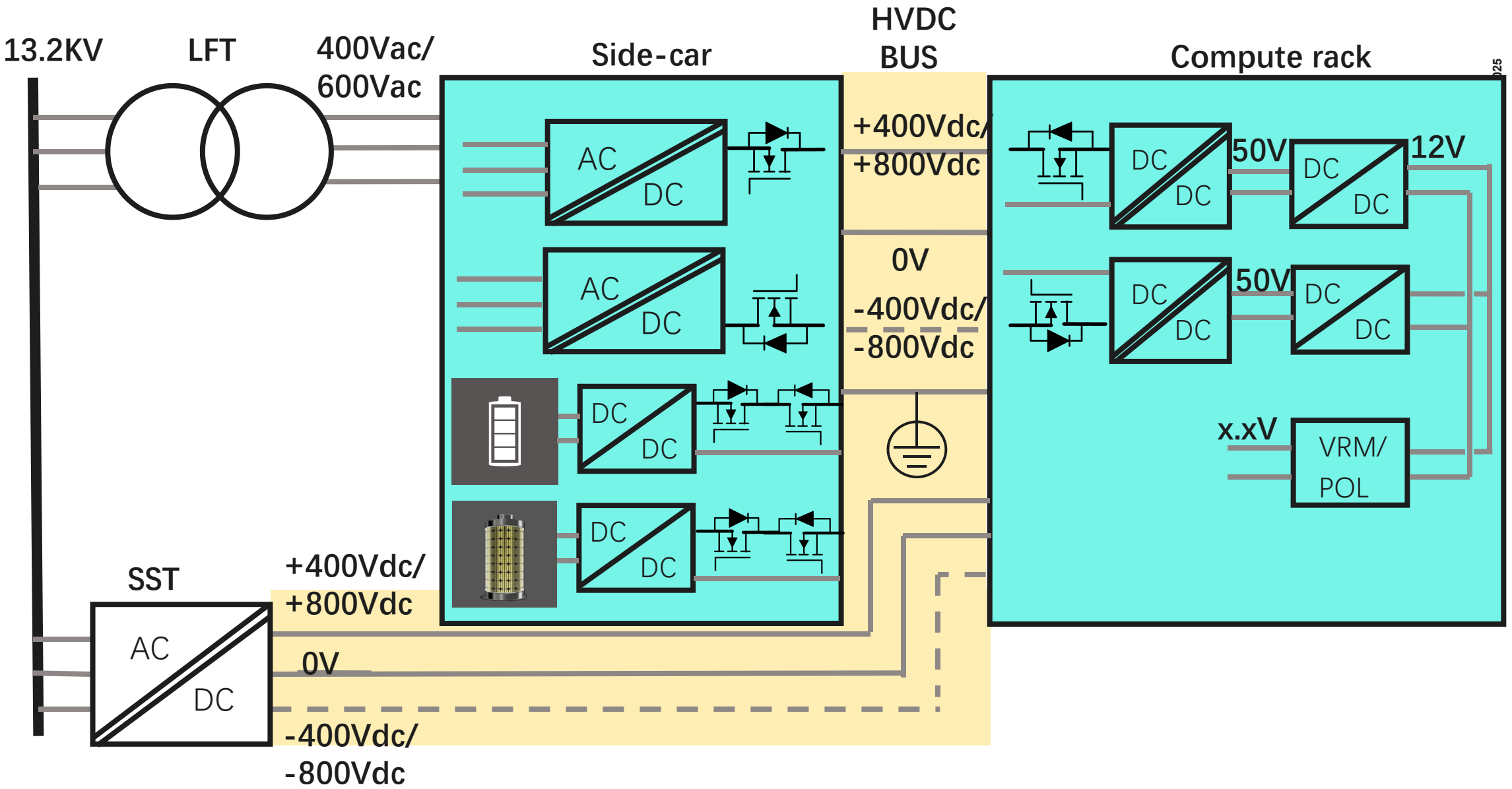

Copyright © Infineon Technologies AG 2025. All rights reserved.

交流输入到高压总线的可用方案

400V？±400V？800V？或者更高压?

	Pros	Cons
0-400V	• Relatively mature component ecosystem developed by EV industry • Lower isolation requirement - better safety and higher density DC/DC design • 2x wire power delivery	• High power rack DC power cable can be bulky • Heavier components with reduced efficiency caused by heat loss (vs 800V)
0-800V	• Lighter cables/components and less heat loss due to lower current requirements (vs 400V) • Better battery power density due to lower current discharge rates (vs 400V) • 2x wire for power delivery	• Relatively new ecosystem • Higher isolation requirements - making safety and DC/DC density more challenging
+/-400V	Combines benefits of 0-400V and 0-800V architectures	• 3x DC wires for power delivery • Power management control required for load balancing

+/-400Vdc enables the rack power system to be relocated out from the payloads rack so that all the premium space in the payloads rack can be used for computing.

Source: OCP 2024
+/- 400Vdc Rack for AL/ML Applications
Xiao Li, Krishnanjan Gubba Ravikumar, Cristiana Peaboy, Google

ICIC2025

Copyright © Infineon Technologies AG 2025. All rights reserved.

如何从交流输入到高压总线

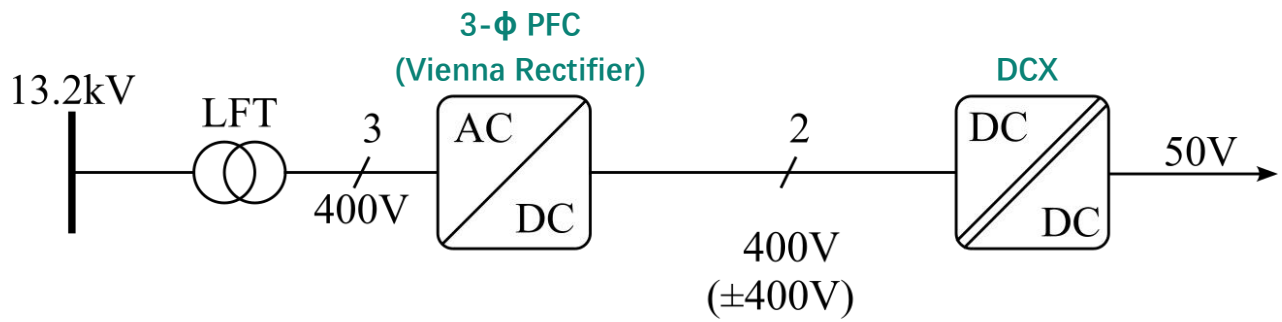

ICIC2025

J. Huber, P. Wallmeier, R. Pieper, F. Schafmeister and J. W. Kolar, "Comparative Evaluation of MVAC-LVDC SST and Hybrid Transformer Concepts for Future Datacenters," IPEC-ECCE Asia, 2022, doi: 10.23919/IPEC-Himeji2022-ECCE53331.2022.9807028

Copyright © Infineon Technologies AG 2025. All rights reserved.

三相 PFC：由于非隔离的原因不太可能单独应用

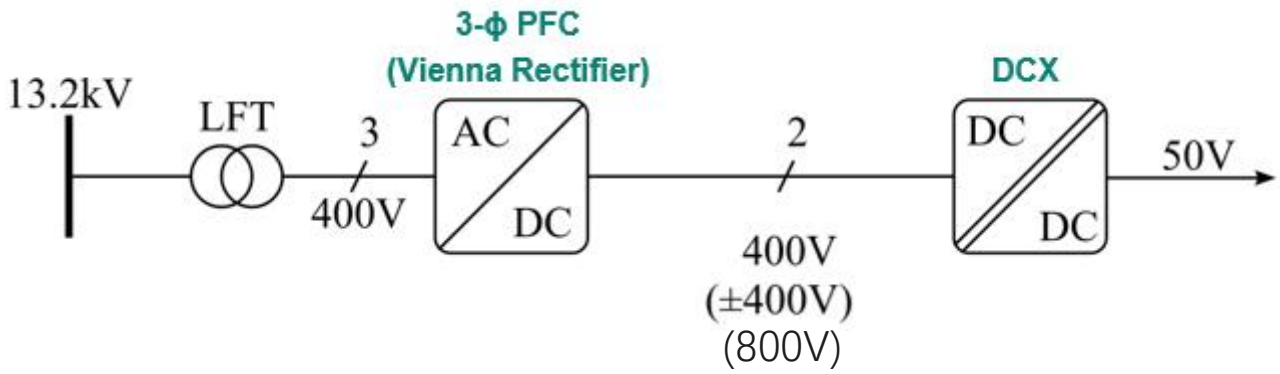

ICIC2025

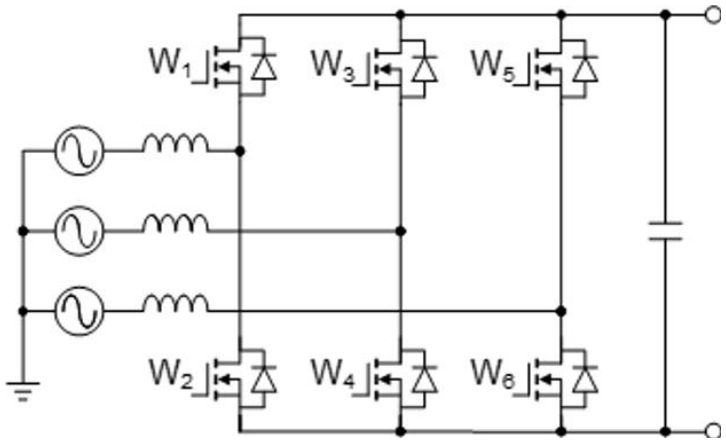

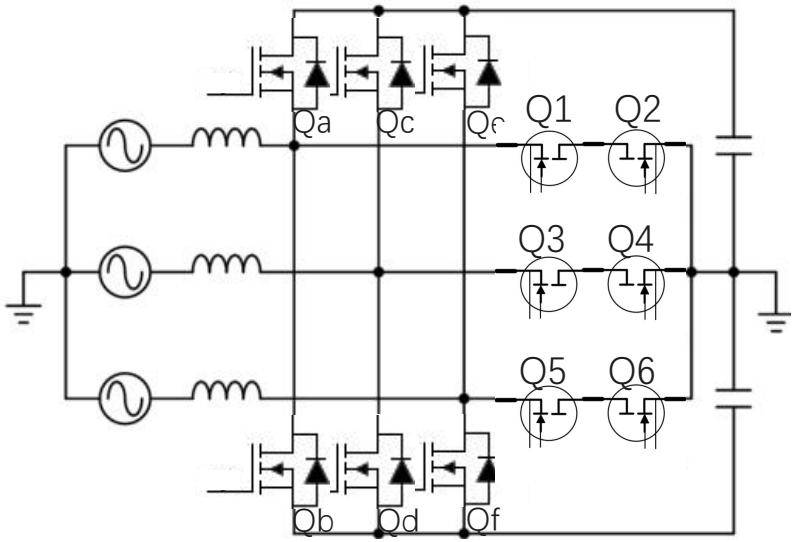

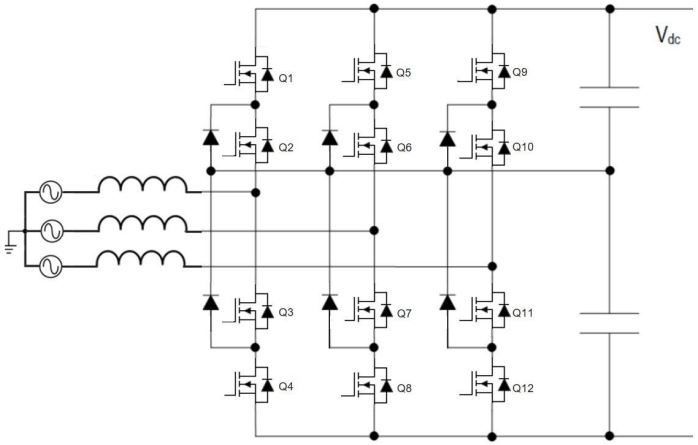

- 800V output
- W1~W6: 1200V SiC MOSFET

- 400V or ±400V or 800V output
- D1~D6: 1200V SiC diode
- Qa~Qf: 1200V SiC MOSFET
- Q1~Q6: MOSFET, SiC MOSFET, GaN (BDS)

- 400V or ±400V or 800V output
- Q1~Q12: 650V SiC MOSFET, GaN

Copyright © Infineon Technologies AG 2025. All rights reserved.

三相PSU-与充电桩设计类似

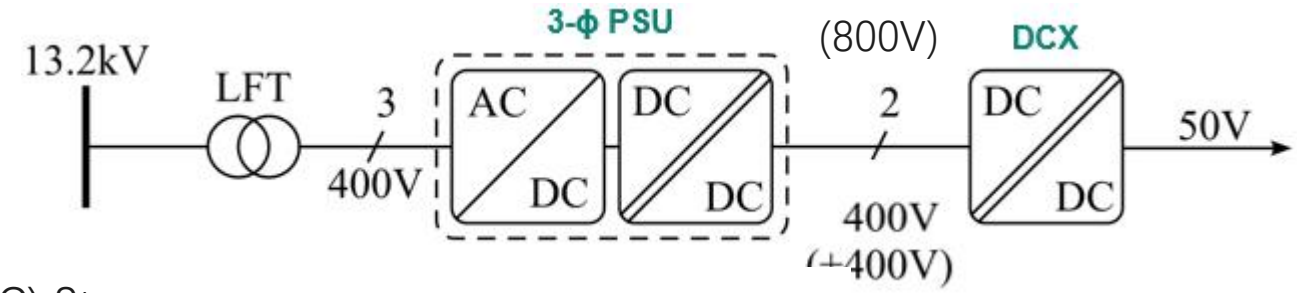

ICIC2025

– AC/DC (PFC) Stage

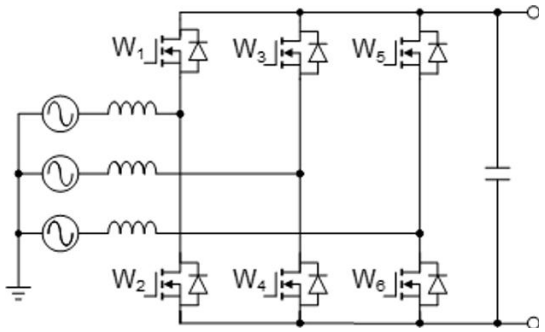

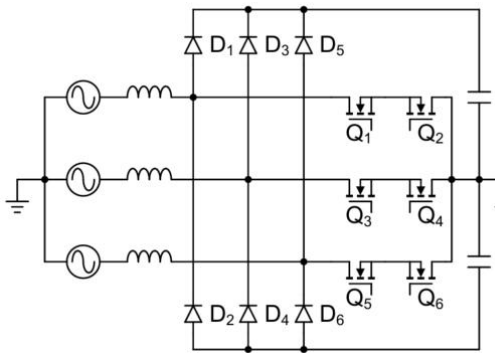

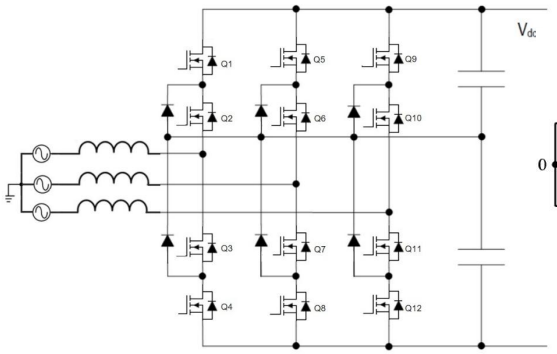

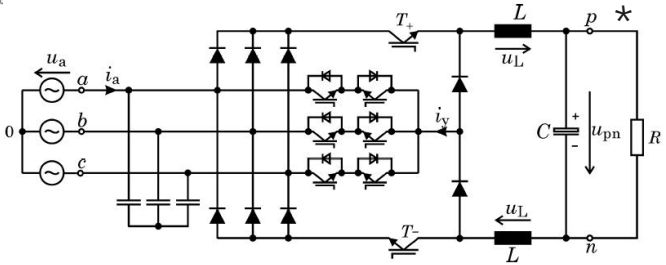

– DC/DC Stage

LLC

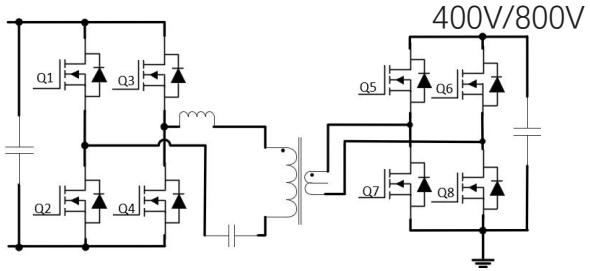

1200V SiC MOSFET

Cascaded LLC

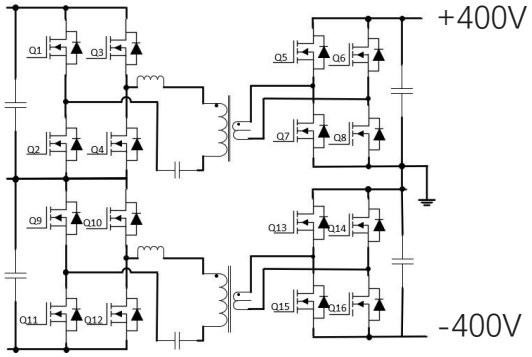

650V GaN or SiC MOSFET

3-level LLC

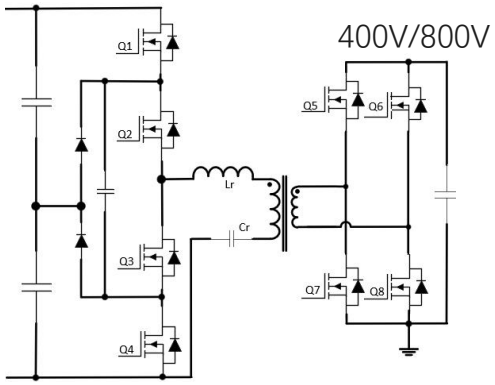

Pri: 650V GaN or 650V SiC MOSFET

Sec: 1200V SiC MOSFET

- Three-phase Unity Power Factor Mains Interfaces of High Power EV Battery Charging Systems, M.Hartmann, T. Friedli, J.W. Kolar, ETH

Copyright © Infineon Technologies AG 2025. All rights reserved.

固态变压器 (SST-Solid State Transformer)-未来极具潜力

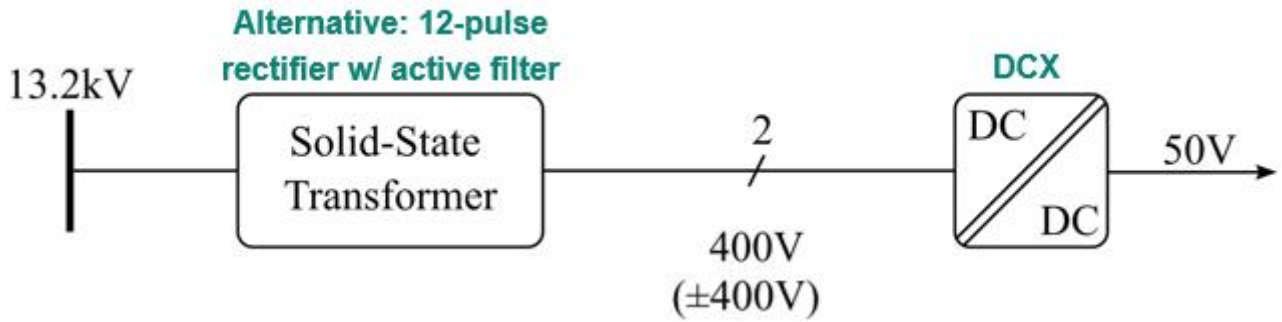

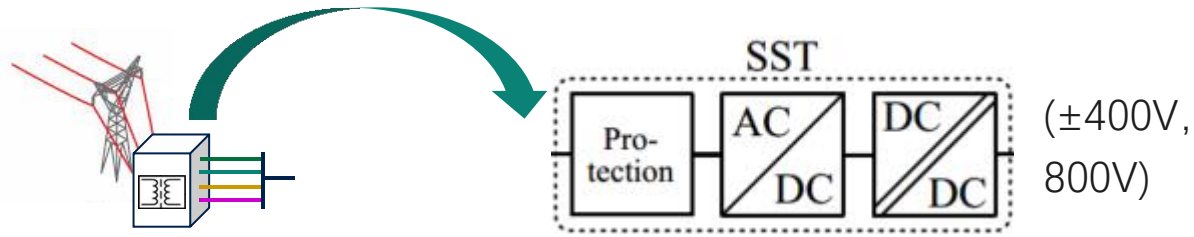

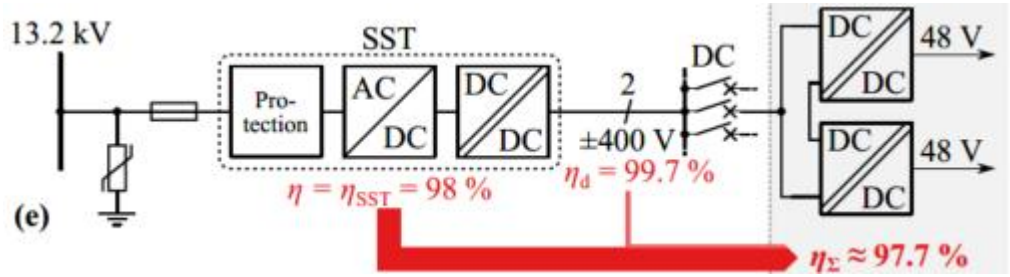

Comparative Evaluation of MVAC-LVDC SST and Hybrid Transformer Concepts for Future Datacenters, J. Huber,J. W. Kolar,P. Wallmeier,R. Pieper, Proceedings of the International Power Electronics Conference 2022

Copyright © Infineon Technologies AG 2025. All rights reserved.

固态变压器 (SST) 方案

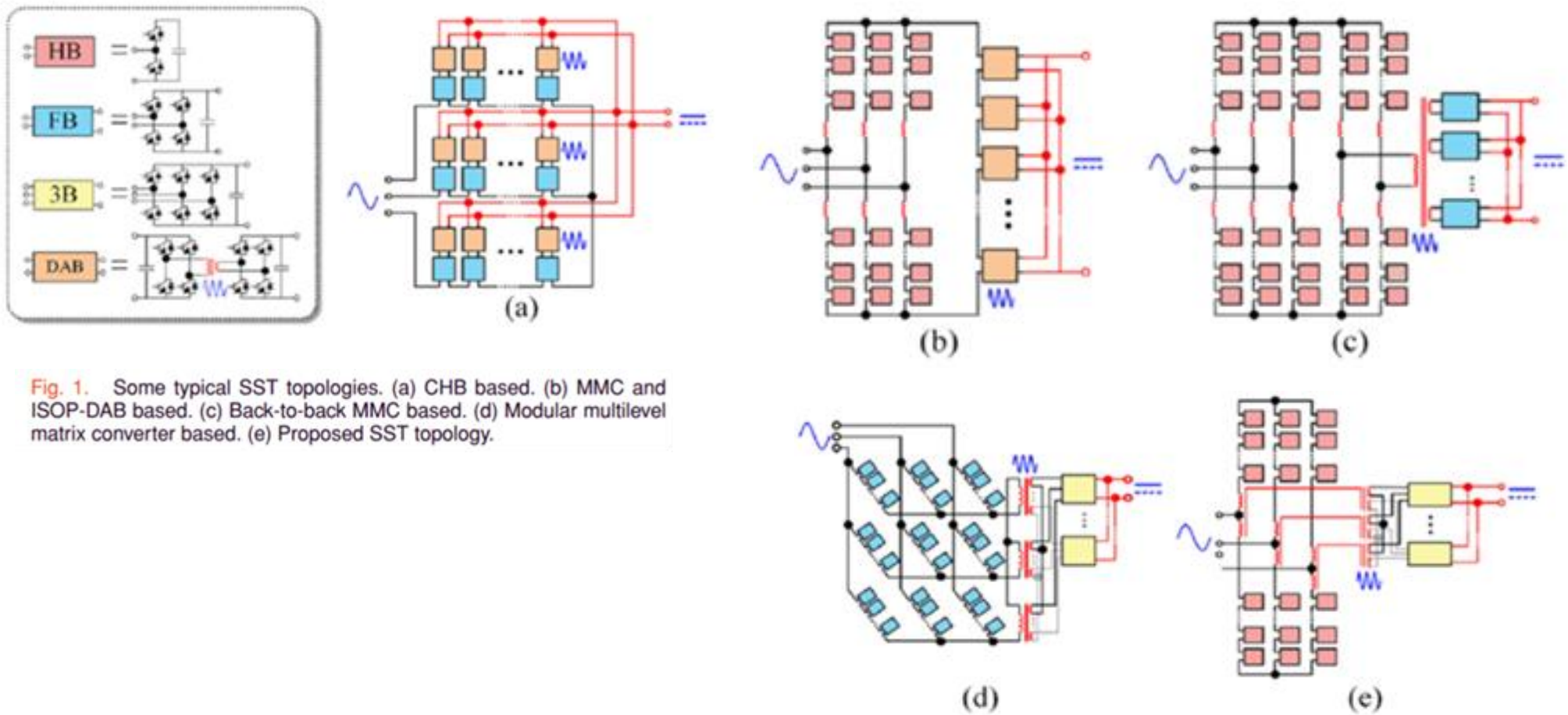

Fig. 1. Some typical SST topologies. (a) CHB based. (b) MMC and ISOP-DAB based. (c) Back-to-back MMC based. (d) Modular multilevel matrix converter based. (e) Proposed SST topology.

A Modular Multilevel Converter (MMC) Based Solid-State Transformer (SST) Topology With Simplified Energy Conversion Process and Magnetic Integration, Gengzhe Zheng, Yu Chen and Yong Kang, IEEE TRANSACTIONS ON INDUSTRIAL ELECTRONICS, VOL. 68, NO. 9, SEPTEMBER 2021

ICIC2025

Copyright © Infineon Technologies AG 2025. All rights reserved.

固态变压器(SST)方案

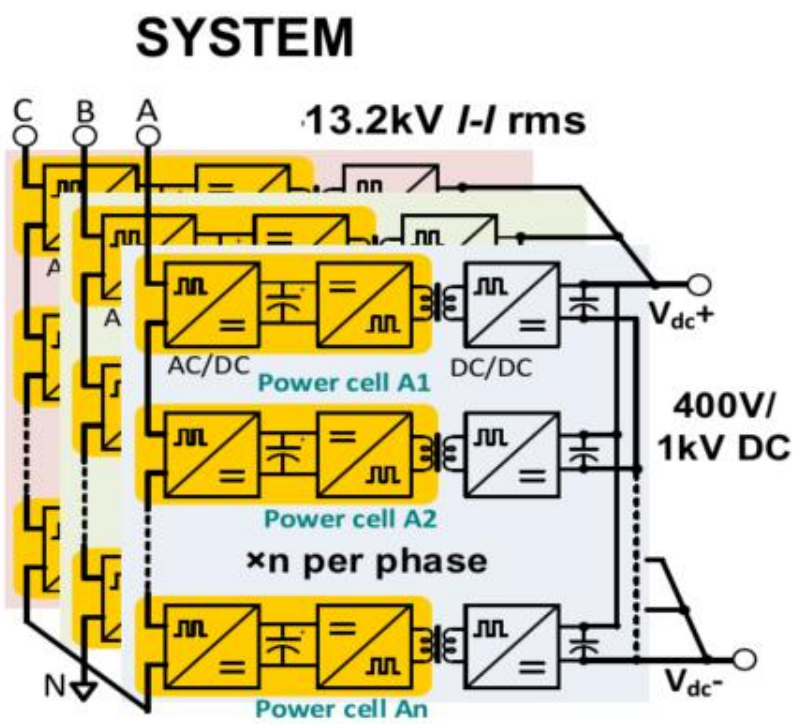

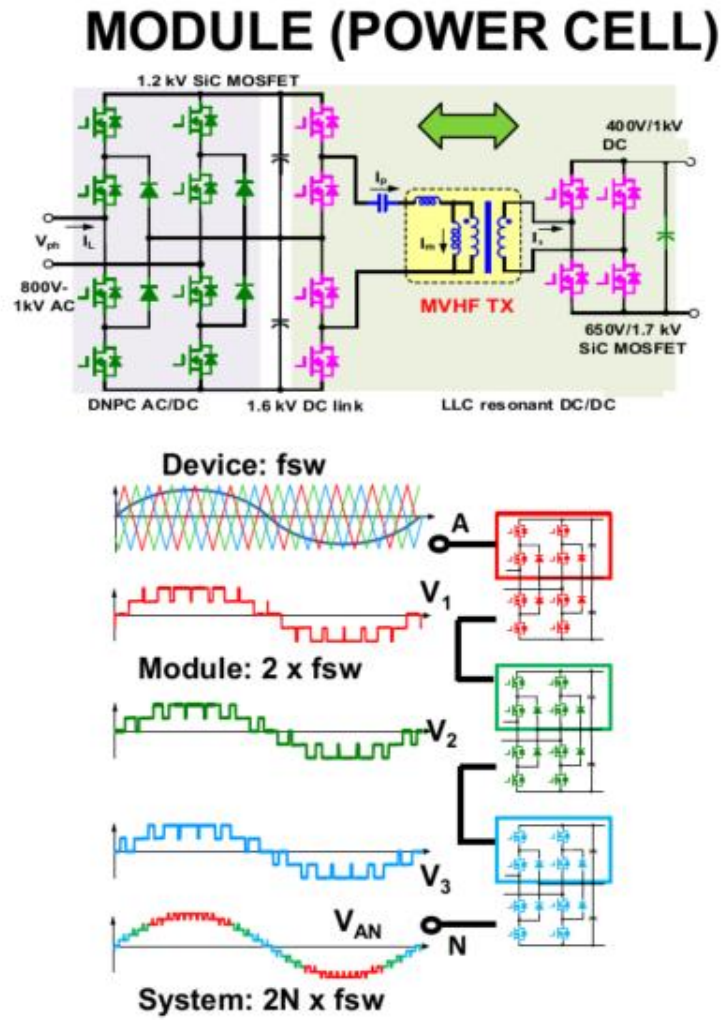

Cascaded multilevel topology:

- **Modular architecture**
- **Series-input, parallel-output (SIPO) module connection**
- **Interleaved input operation**
- **Redundant operation possibility**

Peter Barbosa, Next Generation Power Distribution in Datacenter
CPES Electrified Green Infrastructure Workshop, Delta Electronics

ICIC2025

Copyright © Infineon Technologies AG 2025. All rights reserved.

从高压总线到中压总线的可用方案

未来高功率(>250KW)人工智能数据中心机架供电架构（预测）

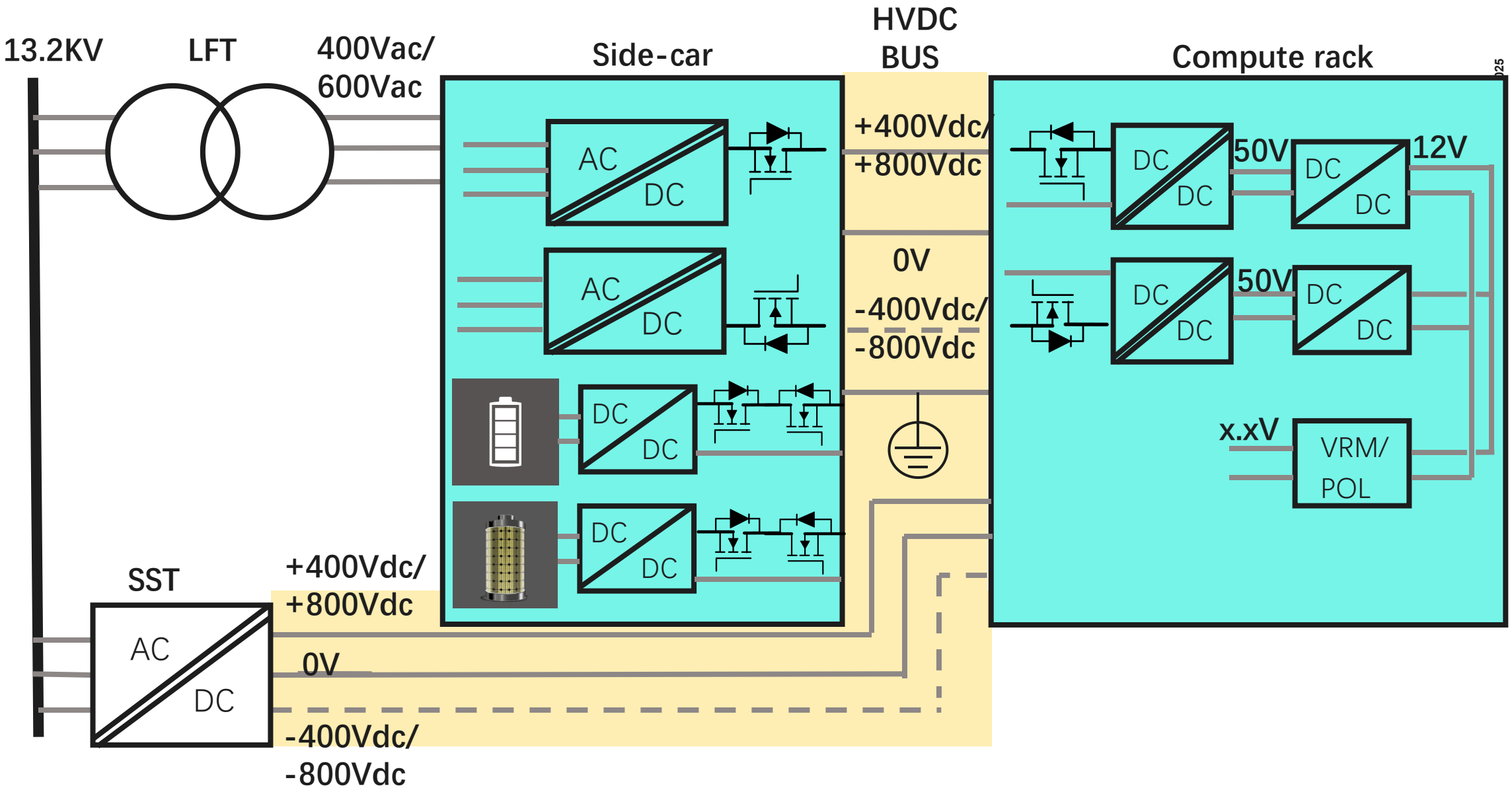

Copyright © Infineon Technologies AG 2025. All rights reserved.

高压直流直流变换方案（稳压？非稳压？）

LLC

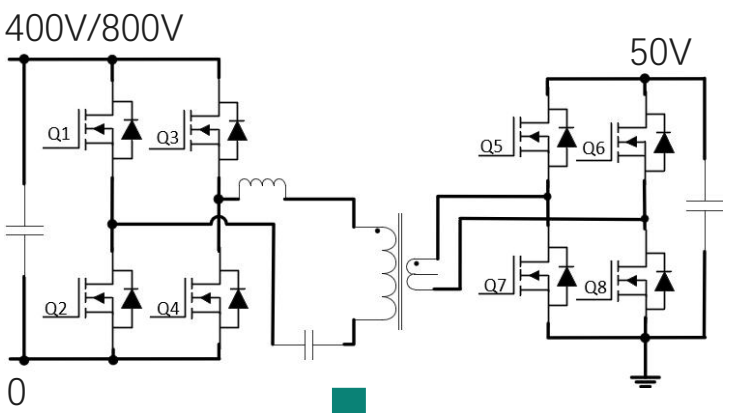

Cascaded LLC

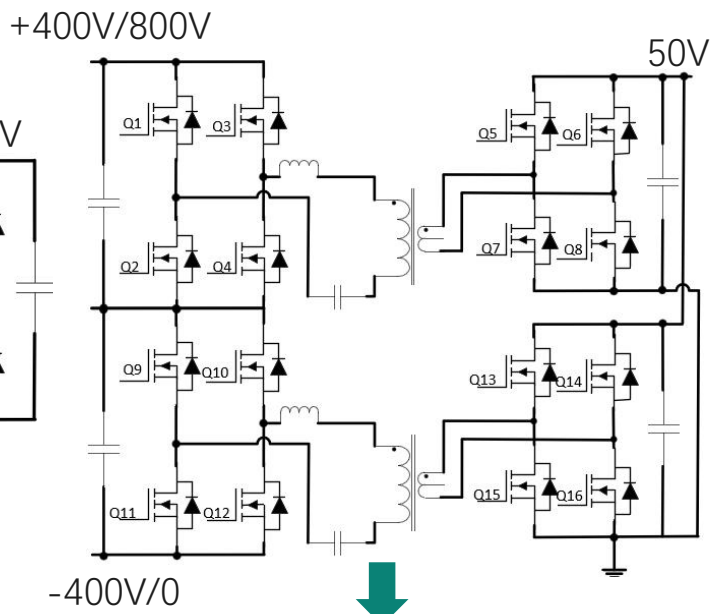

3-level stacked LLC

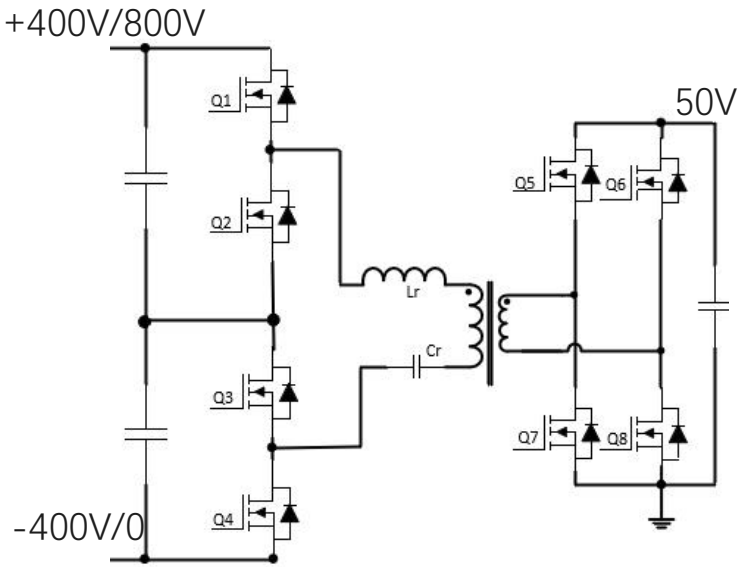

- Q1~Q4: 650V SiC MOSFET / 650V GaN (400V bus voltage) or 1200V SiC MOSFET (800V bus voltage)
- Q5~Q8, Q13~Q16: 80V MOSFET or GaN

- Q1~Q4, Q8~Q12: 650V SiC MOSFET / 650V GaN

ICIC2025

Copyright © Infineon Technologies AG 2025. All rights reserved.

高压直流母线到 50V转换方案

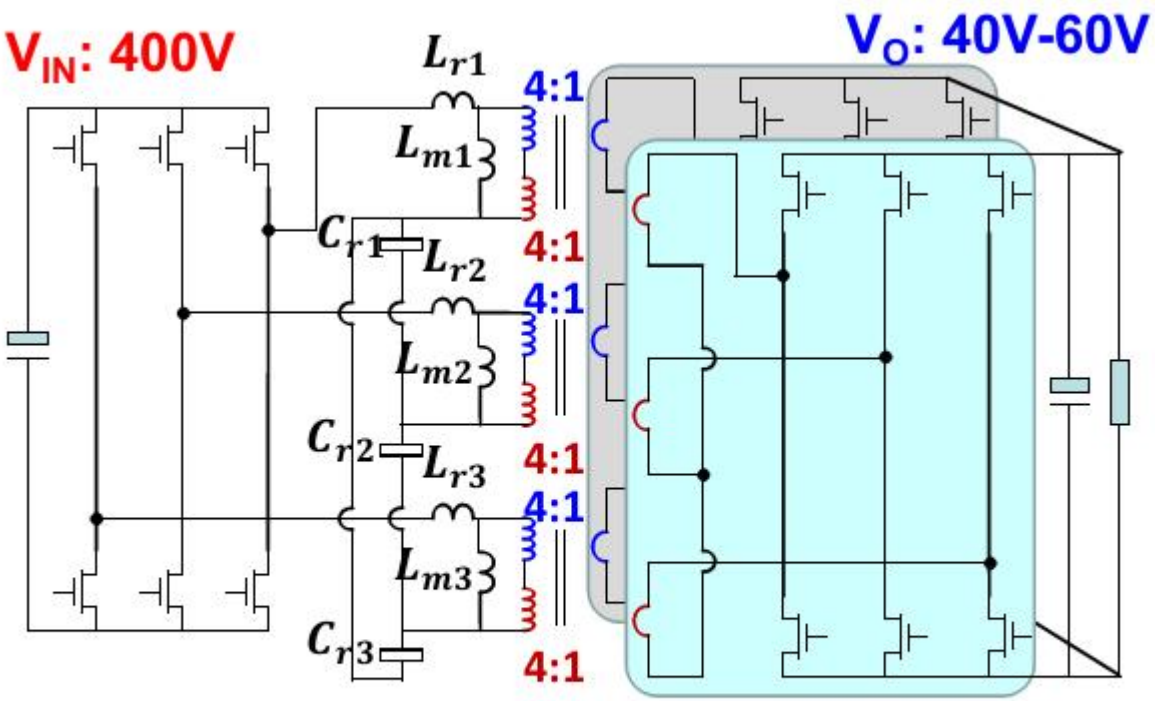

Infineon GaN Devices
600V 35mΩ

Infineon GaN Devices
100V 3.4mΩ

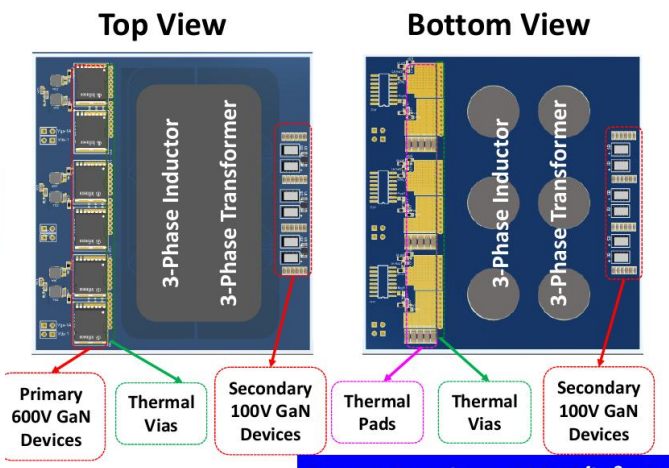

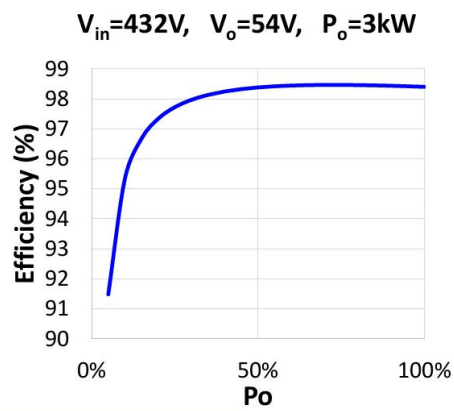

Power Density > 400W/in³ and efficiency > 98.5%

Rimon Gadelrab, Fred C. Lee and Qiang Li
400V/48V Power Supply for Future Data Center

Copyright © Infineon Technologies AG 2025. All rights reserved.

总结

人工智能数据中心走向更高电压总线是必然趋势

ICIC2025

- 人工智能数据中心芯片功耗的增大迫使机架处理功率越来越高
- 只有更高的总线电压才可以降低传输损耗
- 数据中心的供电架构随之变化
- 固态变压器由于其高效率，小尺寸，会逐渐出现在人工智能数据中心应用中
- Vienna/T-type PFC 及LLC拓扑更适合高压总线架构
- 宽禁带器件（SiC MOSFET, GaN）将在高压总线变换器成为主流功率器件

Copyright © Infineon Technologies AG 2025. All rights reserved.

infineon